N O T A
– Planul BS002 se va consulta impreuna
cu planurile BS001;BS003;BS004;BS005;BS006;BS007

N O T E
– The drawing BS002 shall be consulted with the drawings
BS001;BS003;BS004;BS005;BS006;BS007

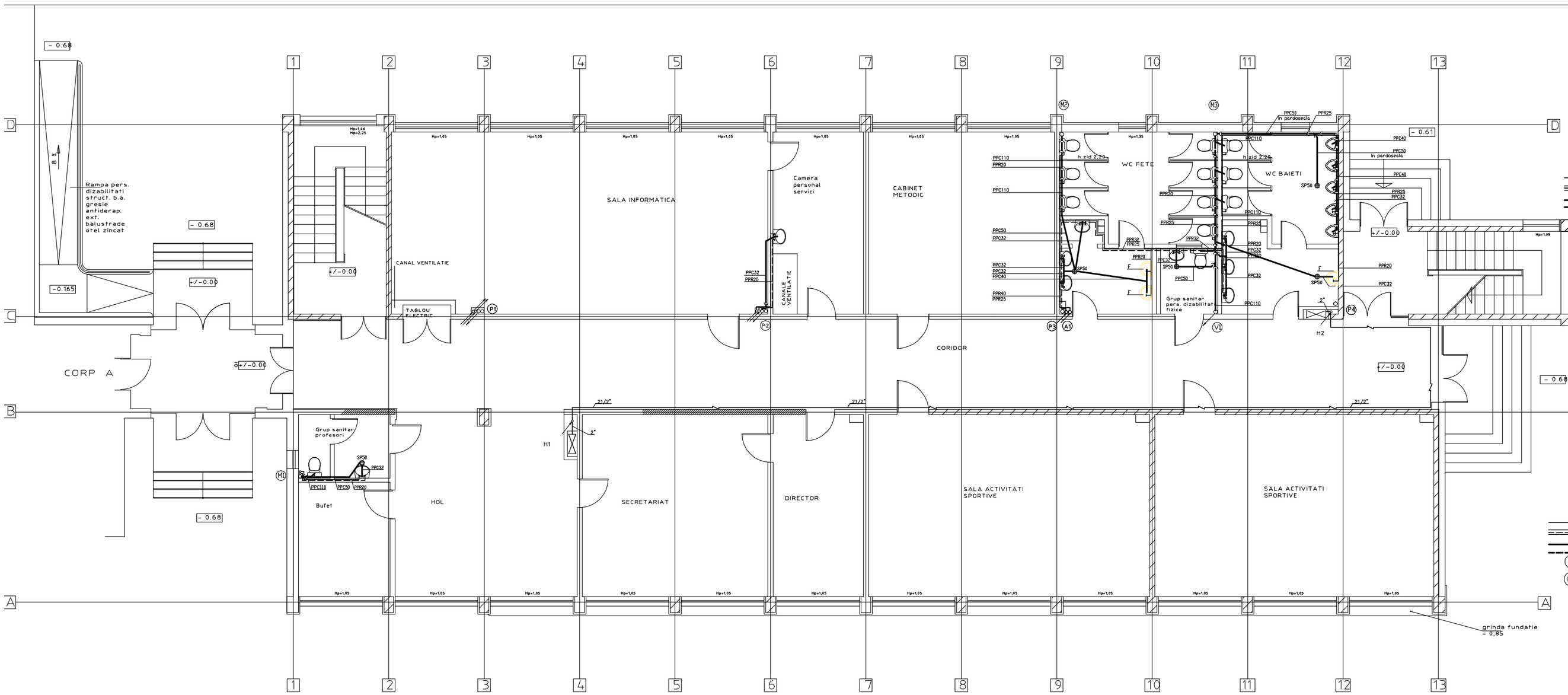

L E G E N D A

- Hydrant pipe of zinc – coated steel pipe
- Cold and hot water pipe
- Sewage pipe
- Sewage rain pipe
- M1 Sewage uprises numbering
- A1 Hot and water uprises numbering
- P1 Rain water uprises numbering
- H1 Hydrant uprises numbering
- Sewage uprises
- Cold water urises
- Hot water uprises
- PPC Sewage polypropylene pipe
- PPR Pipe polypropilene
- H Fully ewuipped indoor hydrant
- Sp Gully
- F Drynking water well
- RC Valve below sink
- RT Straightway ball valve
- I Pipes slope
- STP Roof gully
- CU Check valve
- Ventilation cap
- PC Cleaning piece

L E G E N D A

- Conducta hidranti din teava de otel zincat
- Conducta apa rece, calda si recirculatie
- Conducta canalizare menajera
- Conducta canalizare pluviala
- M1 Numerotare coloane menajera
- A1 Numerotare coloana apa rece si calda
- P1 Numerotare coloane pluviale
- H1 Numerotare coloane hidranti
- Coloana canalizare menajera
- Coloana apa rece
- Coloana apa calda
- PPC Conducta polipropilena de canalizare
- PPR Teava de polipropilena
- H Hidrant complet echipat
- Sp Sifon de pardoseala
- F Fantana apa
- RC Robinet sub lavoar
- RT Robinet de trecere cu sfera
- I Panta conductelor
- STP Sifon terasa
- CU Ventil unisens
- Caciula ventilatie
- PC Piesa de curatire

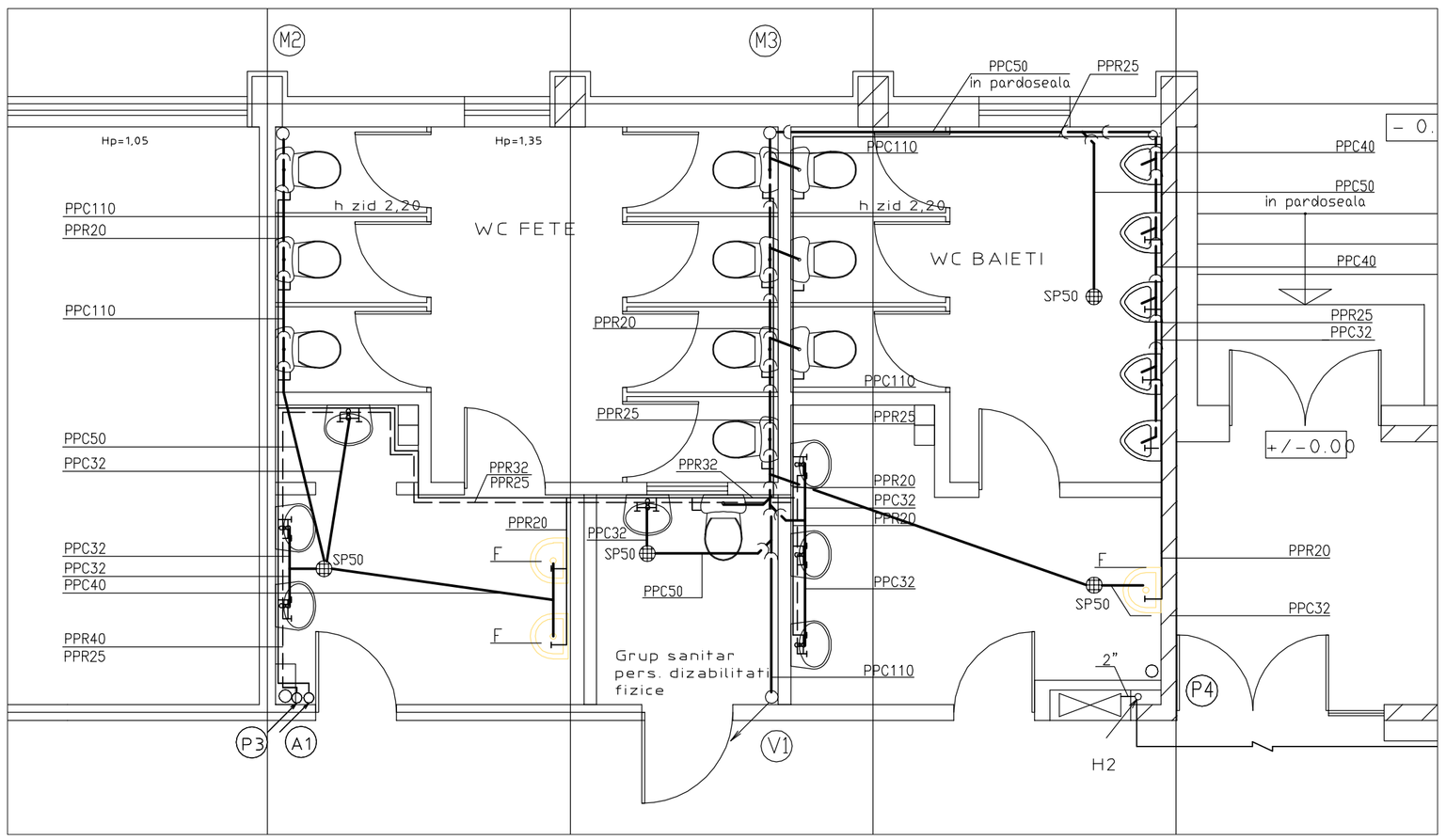

Detaliu grup sanitar 1:50

VERIFICATOR M.L.P.A.T.	NUME	SEMNATURA	CERINTA	REFERAT / EXPERTIZA NR. / DATA

PROJECT DESIGN COORDINATOR:
COORDINATOR PROIECT: THE LOUIS BERGER GROUP, INC

BUCHAREST SCHOOLS INFRASTRUCTURE REHABILITATION / REABILITAREA INFRASTRUCTURII EDUCATIONALE IN MUNICIPIUL BUCURESTI

DESIGNER/PROIECTANT:
SC CONSILIER CONSTRUCT SRL
str. Stupca nr. 6 - Bucuresti
J 40 / 7395 / 95 - R 7738294

Modif	Date/Data	DESIGNED BY/PROIECTAT	VERIFIED BY/ VERIFICAT	PROJ. DIR./SEF PROIECT
M4				
M3				
M2				
M1				

BENEFICIARY/BENEFICIAR
MUNICIPALITY OF BUCHAREST
PRIMARIA MUNICIPIULUI BUCURESTI

SCHOOL NAME/ NUME SCOALA: **SCHOOL no. 20, "SIMION MEHEDINTI"**
SCOALA nr. 20, "SIMION MEHEDINTI"

	NAME/ NUME	SIGNAT./SEMNATURA
DESIGNED BY PROIECTAT	Ing. Alina Mares	
VERIFIED BY VERIFICAT	Ing. Ioan Mares	
PROJ. DIR. SEF PROIECT	arh. Constanta Carp	

TYPE OF WORKS/ LUCRARE: **INDOOR SANITARY INSTALLATION / INSTALATII SANITARE**
SCHOOL - BUILDING B / SCOALA - CORP B

TITLE/ PLANSA: **GROUNDFLOOR PLAN**
PLAN PARTER

DATE/ DATA	SCALE / SCARA	EXEMPLAR NR.	PROJ. PHASE/FAZA PROIECT	PROJ. No./Nr.PROIECT	DRWG. No./Nr. PLANSA
09 / 2006	1:100		Technical design Proiect tehnic	076 / S3	B - S/002

It is prohibited to copy, multiply or print this document without written approval of THE LOUIS BERGER GROUP, INC.